Parts Catalog



S213

S2 Series
Manual Slicer
Model: S213

10/30/2026 Rev. E
IMPORTANT!
TO EXPEDITE SHIPMENT OF PARTS, ALWAYS SPECIFY MODEL, REV, PART NUMBER, AND SERIAL NUMBER OF UNIT.

GLOBE FOOD EQUIPMENT COMPANY
2215 East River Road
Dayton, Ohio 45439

Parts Department
Toll Free 1-800-745-6238
E-Mail: info@globefoodequip.com
Website: www.globefoodequip.com

Not for resale

© Globe Food Equipment Company, 2026
900148 ECN1283

Table of Contents

Description	Page
S213 Base Components	4
S213 Index Knob Components	6
S213 Gauge Plate Components	8
S213 Knife Cover Components	10
S213 Knife Drive Assembly Components	12
S213 Knife Drive Motor Components	14
S213 Ring Guard Assembly Components	16
S213 Sharpener Assembly Components	18
S213 Kickstand Assembly Components	20
S213 Index Plate Assembly Components	22
S213 Transport Assembly Components	24
S213 Carriage Tray Assembly Components	26
S213 Electrical Components	28
S213 Slicer Schematic	30

S213 Base Components

6 [7 & 8

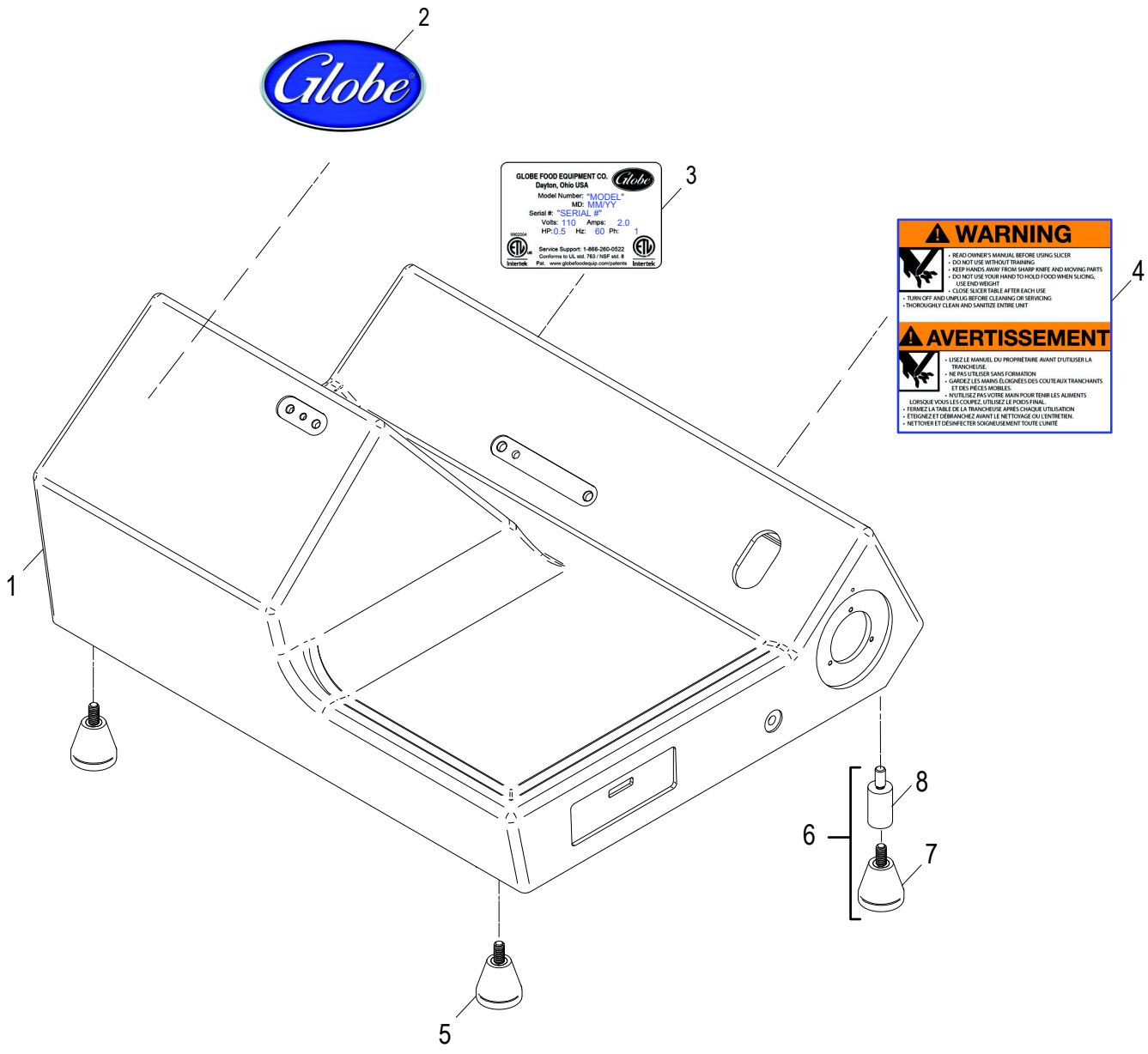

© Globe Food Equipment Company

S213 Base Components

Item	Part Number	Description	Qty	Serial Number
1	400240	Slicer Base	1	
2	920202	Globe Logo Decal S - Series	2	
3	900098	Data Plate, S2-Series	1	
4	900097	Warning Label, English/French	1	
5	510132	Standard Slicer Foot	2	
6	500152-01	Standard Slicer Foot Kit (Incls. Items 8-9)	2	
7	510132	Standard Slicer Foot	1	
8	460291	Foot Extension	1	

© Globe Food Equipment Company

S213 Index Knob Assembly

1 — 2-3
4 — 5-6
7 — 8-11

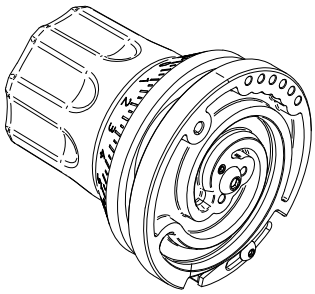

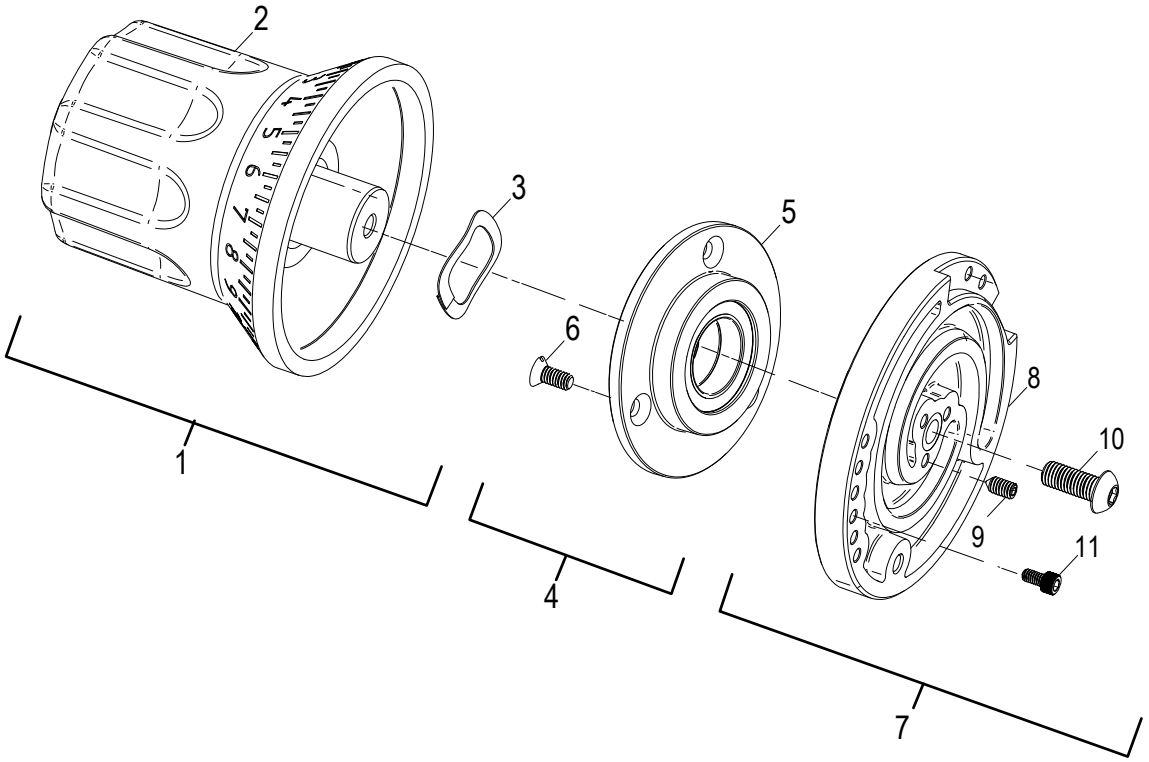

© Globe Food Equipment Company

S213 Index Knob Assembly

Item	Part Number	Description	Qty	Serial Number
1	500136	Index Knob Assembly (Incls. items 2-3)	1	
2	500111	Index Knob	1	
3	800376	Single Wave Washer 20.220 mm x 28 mm	1	
4	400268	Index Hub Assembly Kit (Incls. items 5-6)	1	
5	400211	Index Hub Assembly	1	
6	800380	Slotted Flat Head Screw 8-32 x 0.375	3	
7	500137-01	Cam Plate Assembly (Incls. items 8-11)	1	
8	510108	Cam	1	
9	800431	Hex Socket Cone Point Set Screw #8-32x0.25	3	
10	800389	Hex Socket Button Head Screw1/4-28	1	
11	800390	Hex Socket Cap Head Screw 8-32x0.312	1	

© Globe Food Equipment Company

S213 Gauge Plate Components

2 [3-7

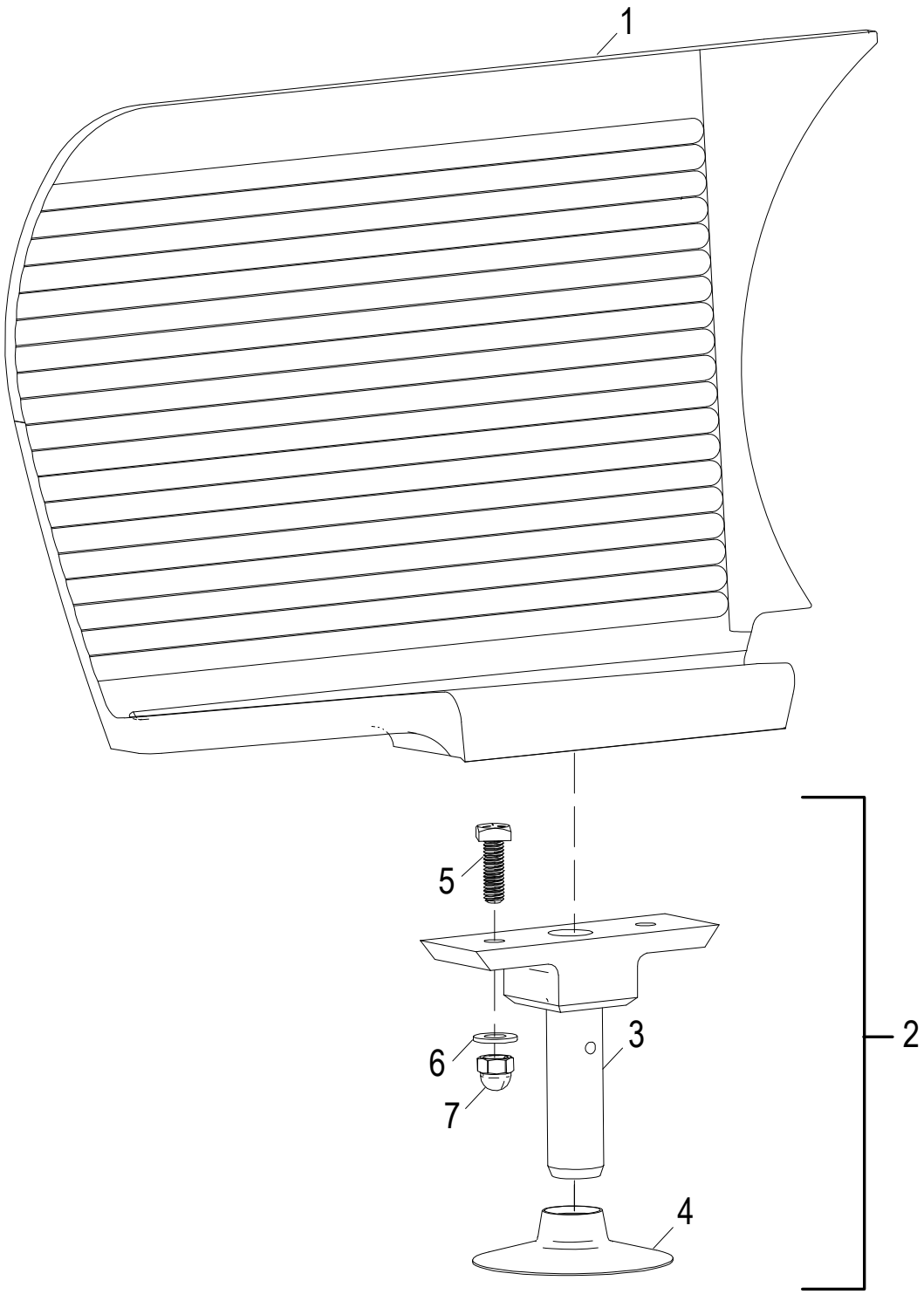

© Globe Food Equipment Company

S213 Gauge Plate Components

Item	Part Number	Description	Qty	Serial Number
1	400308	Gauge Plate	1	
2	400272	Post Mount Assembly Kit (Incls. items 3-7)	1	
3	400098	Post Mount Assembly	1	
4	550014	Gauge Plate Boot	1	
5	800387	Square Head Screw 5/16-18 x 1.00	2	
6	800049	Flat Washer 5/16 x 0.69	2	
7	800388	Cap Nut 5/16-18 x 0.531	2	

© Globe Food Equipment Company

S213-16 Knife Cover Components

2 – [3 & 4

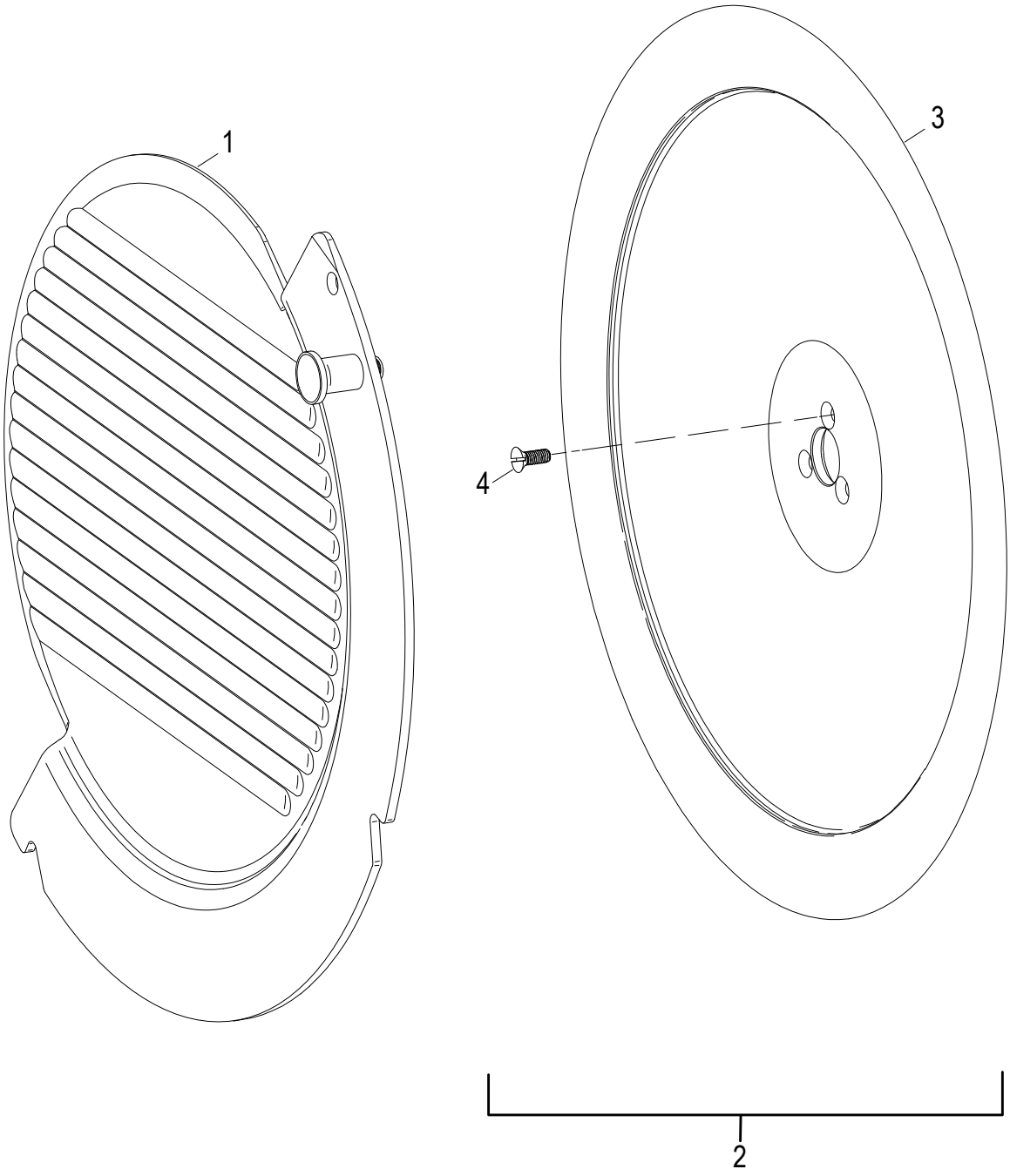

© Globe Food Equipment Company

S213-16 Knife Cover Components

Item	Part Number	Description	Qty	Serial Number
1	300185	Knife Cover Assembly	1	
2	400139-01	Knife Kit (Incls. items 3 & 4)	1	
3	450170	13 Inch Steel Knife	1	
4	810274	Slotted Flat Head Screw,10-32x0.5	3	

© Globe Food Equipment Company

S213 Knife Drive Assembly Components

1 – 2-7

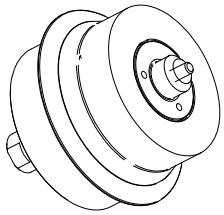

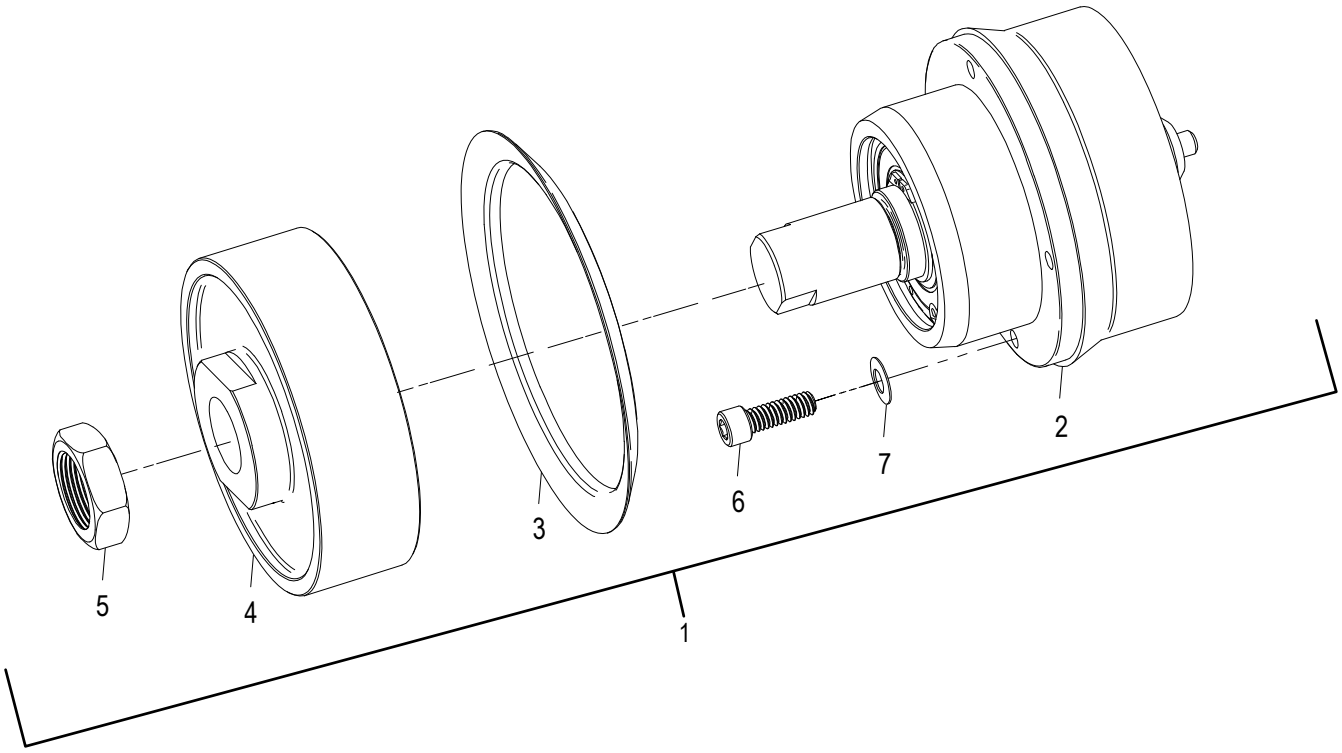

© Globe Food Equipment Company

S213 Knife Drive Assembly Components

Item	Part Number	Description	Qty	Serial Number
1	400270	Knife Drive Assembly (Incls. items 2-7)	1	
2	420088	Knife Drive Bearing Assembly	1	
3	520244	Knife Drive Boot	1	
4	450032	Knife Drive Pulley	1	
5	510033	Hex Nut, 7/8-20 Zinc	1	
6	810229	Socket Head Cap Screw 1/4-20x0.75	4	
7	810275	Spring Washer, 1/4x0.5	4	

© Globe Food Equipment Company

S213 Knife Drive Motor Components

2 [3-5
9 [10-11

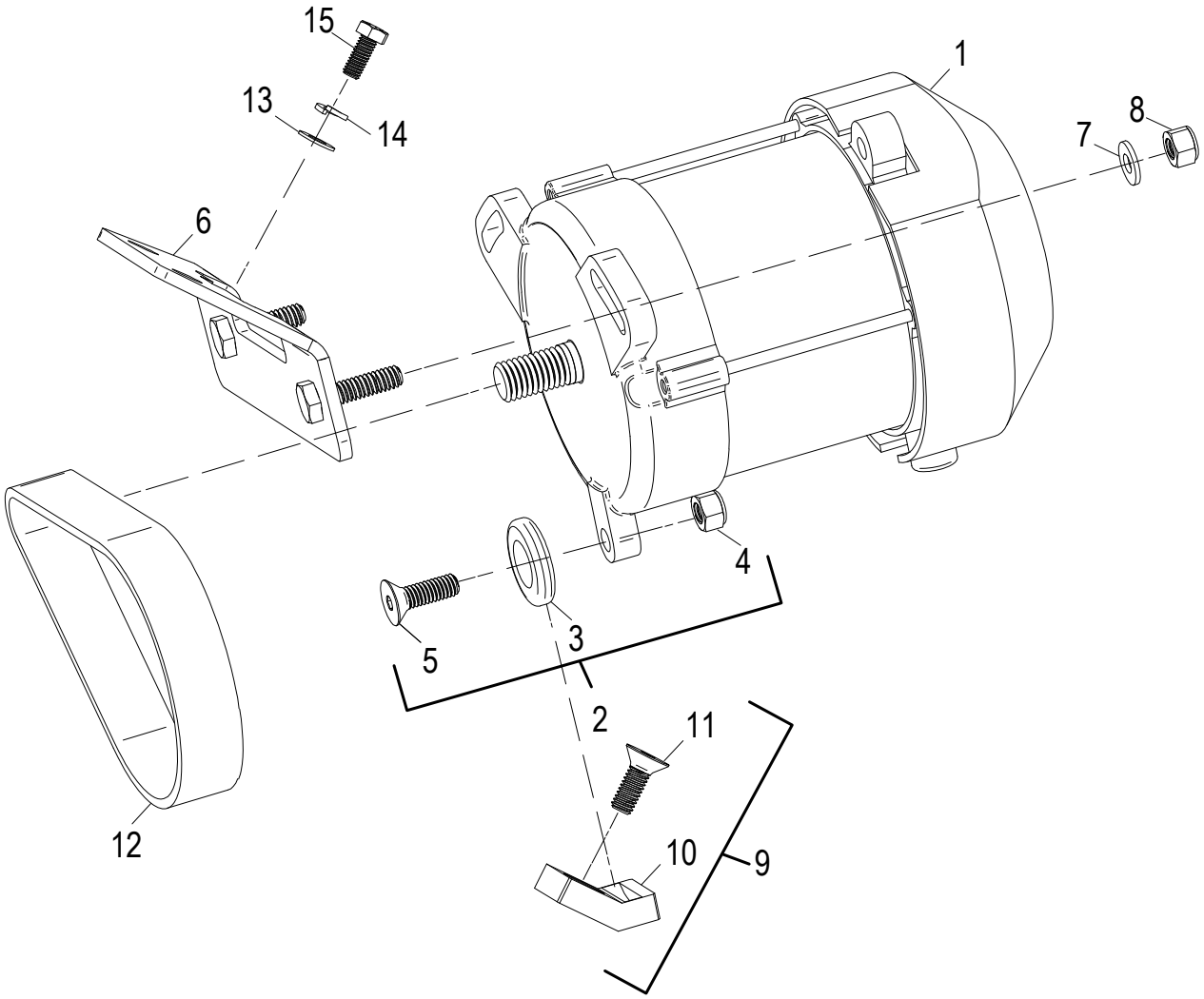

© Globe Food Equipment Company

S213 Knife Drive Motor Components

Item	Part Number	Description	Qty	Serial Number
1	140140	Knife Drive Motor, Single Phase	1	
2	100066	Knife Motor Pivot Kit (Incls. items 3-5)	1	
3	510107	Knife Motor Pivot Disc	1	
4	810420	Nylon Insert Locknut 5/16-18	1	
5	800437	Hex Socket Flat Head Screw 5/16-18x1.00	1	
6	300166	Motor Mount Bracket (incls. welded hex head screws)	1	
7	810345	Flat Washer, 1/4 x 0.63	2	
8	810438	Nylon Insert Lock Nut 1/4-20	2	
9	400271	Drive Motor Pivot Block Kit (Incls. items 10-11)	1	
10	460256	Drive Motor Pivot Block	1	
11	800281	Hex Socket Flat Head Screw 5/16-8x.875	1	
12	500093	Knife Drive Belt	1	
13	810416	Flat Washer, 5/16 x 0.69	2	
14	800248	Split Lock Washer, 5/16 x 0.58	2	
15	800274	Hex Head Screw, 5/16-18x0.75	2	

© Globe Food Equipment Company

S213 Ring Guard Assembly Components

1 ┌ 2-3, 5-8, 10-14 & 16-23
4 ┌ 5-8
9 ┌ 10-12
15 ┌ 16-20

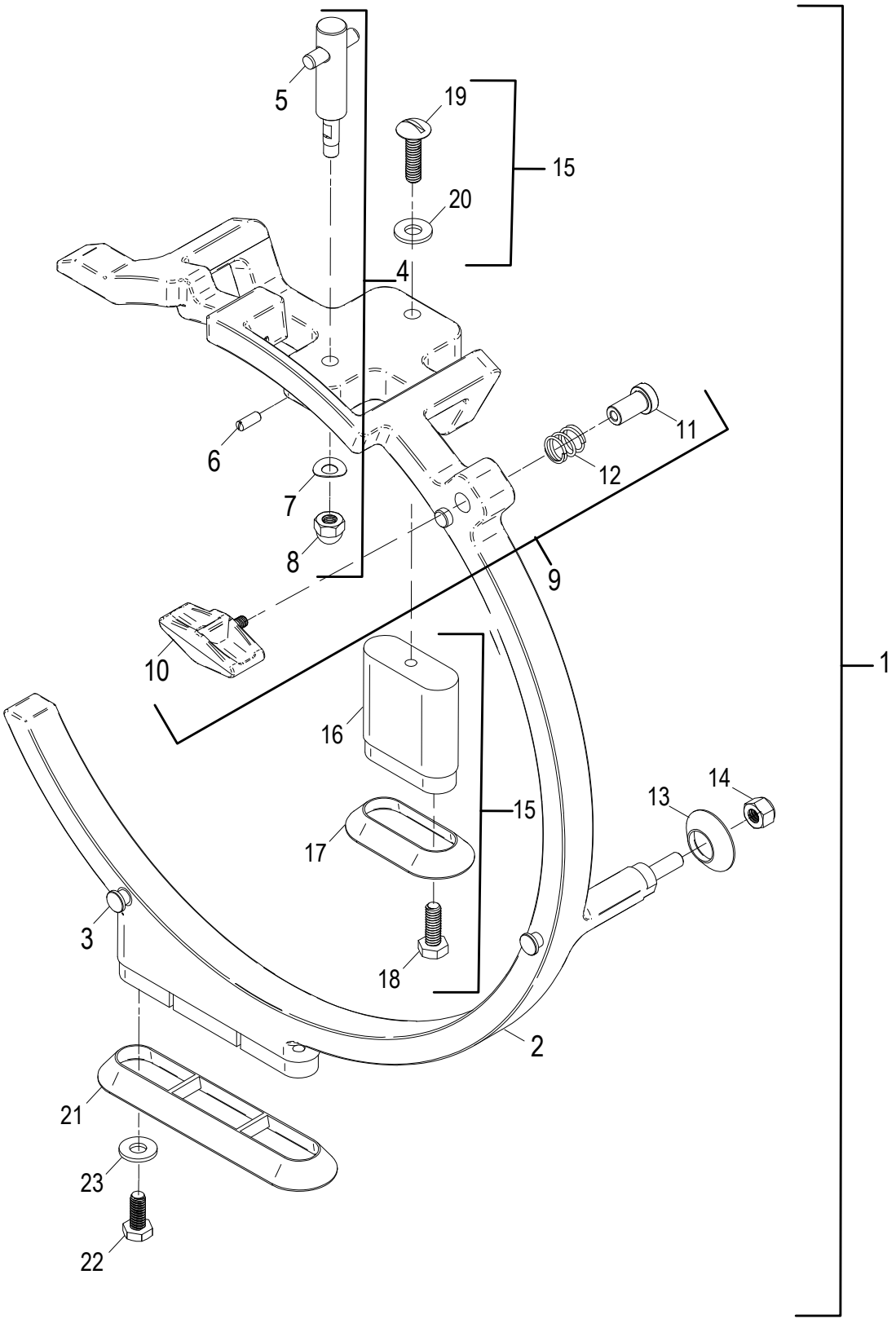

© Globe Food Equipment Company

S213 Ring Guard Assembly Components

Item	Part Number	Description	Qty	Serial Number
1	500140-01	Ring Guard Assembly Kit (Incls. items 2-3,5-8,10-14&16-23)	1	
2	510135	Ring Guard	1	
3	450130	Locator Pin	2	
4	460069-01	Sharpener Mount Kit, Standard (Incls. items 5-8)	1	
5	450131-01	Sharpener Mount Assembly	1	
6	810483	Slotted Set Screw, #10-32x0.50	1	
7	800184	Spring Washer 0.26x0.55x0.015	1	
8	800185	Acorn Nut, 1/4-28	1	
9	500141	Knife Cover Lock Knob Kit (Incls. items 10-12)	1	
10	510105	Knife Cover Lock Knob	1	
11	460251	Cover Lock Cap	1	
12	810503	Compression Spring 0.48 x 0.045 Wire x 0.50	1	
13	510125	Post Ring Boot	1	
14	810438	Nylon Insert Lock Nut 1/4-20	1	
15	200056-01	Ring Guard Spacer Kit (Incls. items 16-20)	1	
16	200054	Ring Guard Spacer	1	
17	510124	Upper Ring Boot	1	
18	810431	Hex Head Screw 1/4-20x0.75	2	
19	810358	Slotted Truss Head Screw 1/4-20 x 1.00	1	
20	810345	Flat Washer, 1/4 x 0.63	1	
21	510136	Lower Ring Boot	1	
22	800072	Hex Head Screw ¼-20x0.63	2	
23	810345	Flat Washer, 1/4 x 0.63	2	

© Globe Food Equipment Company

S213 Sharpener Assembly Components

1 — 2-42
2 — 3-13
3 — 4-6
7 — 8-10
14 — 15-23
15 — 16-18
24 — 25-35

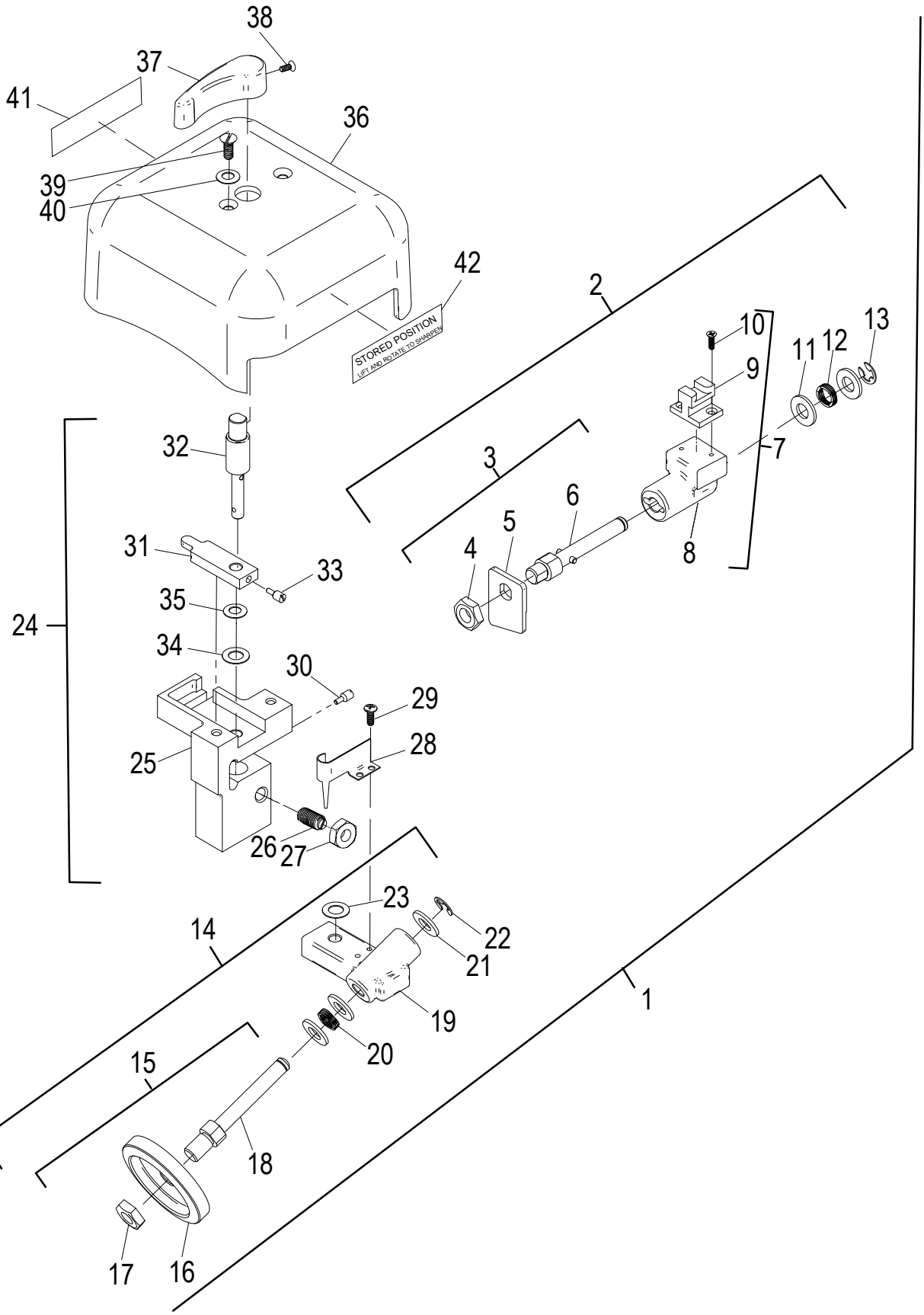

© Globe Food Equipment Company

S213 Sharpener Assembly Components

Item	Part Number	Description		Qty	Serial Number
1	440044-03	Grit Sharpener Assembly	(Incl. items 2-42)	1	
2	430051-02	Grit Honing Stone Assembly	(Incl. items 3-13)	1	
3	940033-02	Grit Honing Stone Shaft Assembly	(Incl. items 4-6)	1	
4	810430	Jam Nut 3/8-24		1	
5	200047	Flat Grit Honing Stone		1	
6	450163	Honing Stone Dowel Assembly		1	
7	400291	Honing Stone Bracket Kit		1	
8	430032	Honing Stone Bracket		1	
9	430042	Honing Stone Slide		1	
10	810222	Phillips Flat Head Screw #4-40 x 0.38		2	
11	810272	Flat Washer 5/16 x 0.63		2	
12	810362	Wave Spring 0.38 x 0.49 x 0.14		1	
13	810273	External Retaining Ring, Type E 0.243 x .50		1	
14	430052-02	Grit Sharpening Stone Assembly	(Incl. items 15-23)	1	
15	940044-02	Grit Sharpening Stone Shaft Assembly	(Incl. items 16-18)	1	
16	410049	Grit Sharpening Stone		1	
17	810430	Jam Nut 3/8-24		1	
18	460065	Sharpening Stone Shaft		1	
19	430031	Sharpening Stone Bracket		1	
20	810361	Wave Spring 0.37 x 0.49 x 0.15		1	
21	810272	Flat Washer 5/16 x 0.63		3	
22	810273	External Retaining Ring, Type E 0.243 x .50		1	
23	810437	Flat Washer 5/16 x 0.57		1	
24	400137	Sharpener Mount Center Kit	(Incl. items 25-35)	1	
25	430045	Sharpener Center Mount		1	
26	810488	Slotted Ball Plunger, 1/4-28 x 0.531		1	
27	810489	Jam Nut 1/4-28		1	
28	310137	Sharpener Return Spring		1	
29	810271	Phillips Pan Head Screw #6-32x0.375		2	
30	810344	Slotted Dog Point Set Screw #10-32 x 0.45		1	
31	430040	Honing Stone Lever		1	
32	400183	Sharpener Handle Shaft		1	
33	810344	Slotted Dog Point Set Screw #10-32 x 0.45		1	
34	810437	Flat Washer 5/16 x 0.57		1	
35	800184	Spring Washer 0.26x0.55x0.015		1	
36	250069	Sharpener Cover		1	
37	500070	Sharpener Handle, Top		1	
38	800223	Phillips Flat Head Screw #8-32 x 0.375		1	
39	810246	Slotted Truss Head Screw #10-32 x 0.50		2	
40	810279	Spring Washer #10 x 0.42		2	
41	920215	Label, Sharpen Position		1	
42	920216	Label, Stored Position		1	

© Globe Food Equipment Company

S213 Kickstand Assembly Components

1 — 2-8

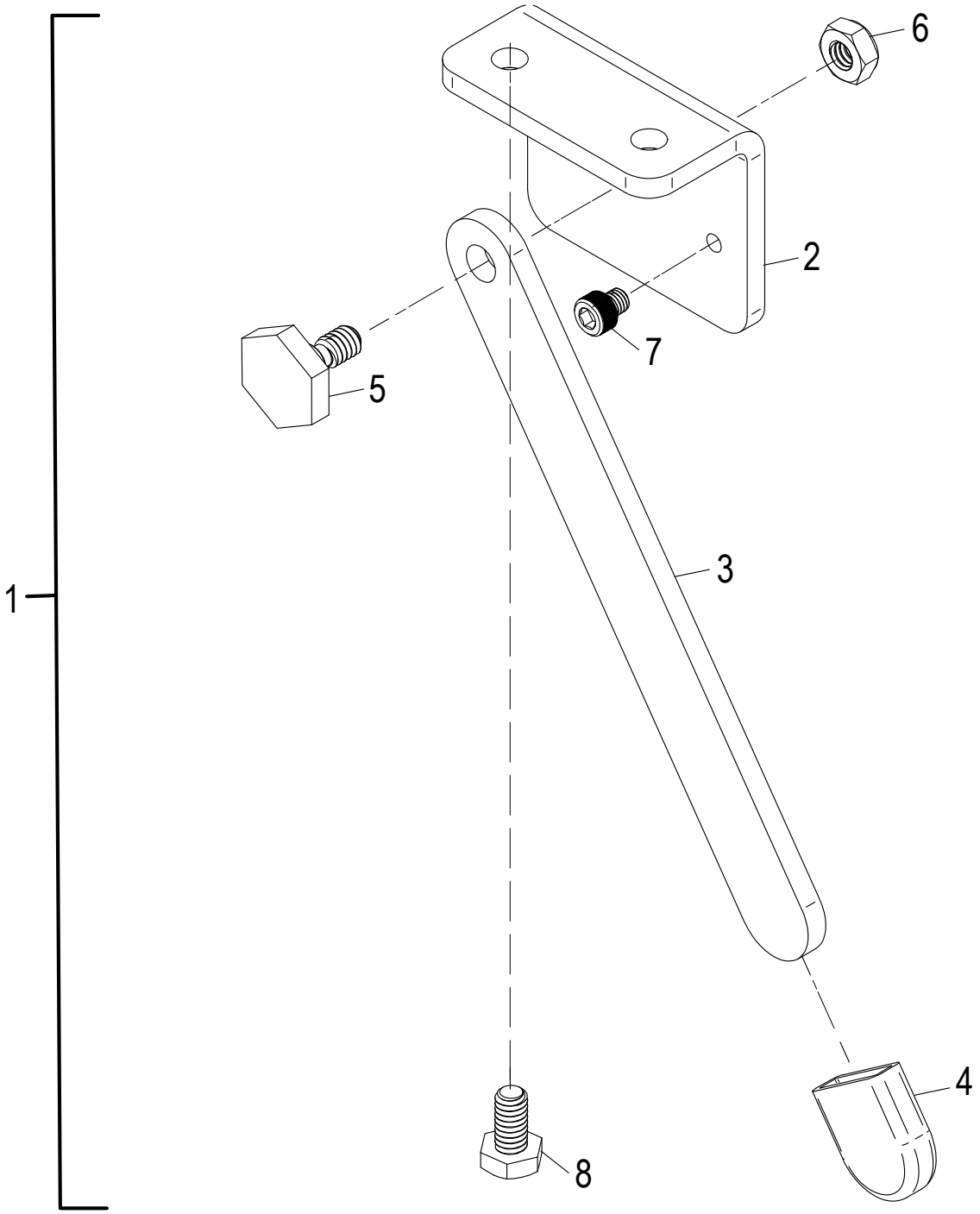

© Globe Food Equipment Company

S213 Kickstand Assembly Components

Item	Part Number	Description	Qty	Serial Number
1	300250	Manual Kickstand Kit (Incls. items 2-8)	1	
2	300208	Manual Kickstand Bracket	1	
3	300209	Manual Kickstand Arm	1	
4	500062	Manual Kickstand Boot	1	
5	400241	Kickstand Securing Screw	1	
6	800128	Nylon-Insert Thin Hex Nut 1/4-20 SST	1	
7	800275	Hex Socket Cap Screw No. 10-32 x 0.187	1	
8	800356	Hex Head Screw 1/4-20 x 0.50	2	

© Globe Food Equipment Company

S213 Index Plate Assembly Components

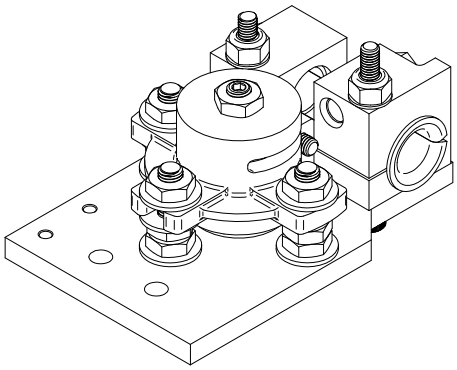

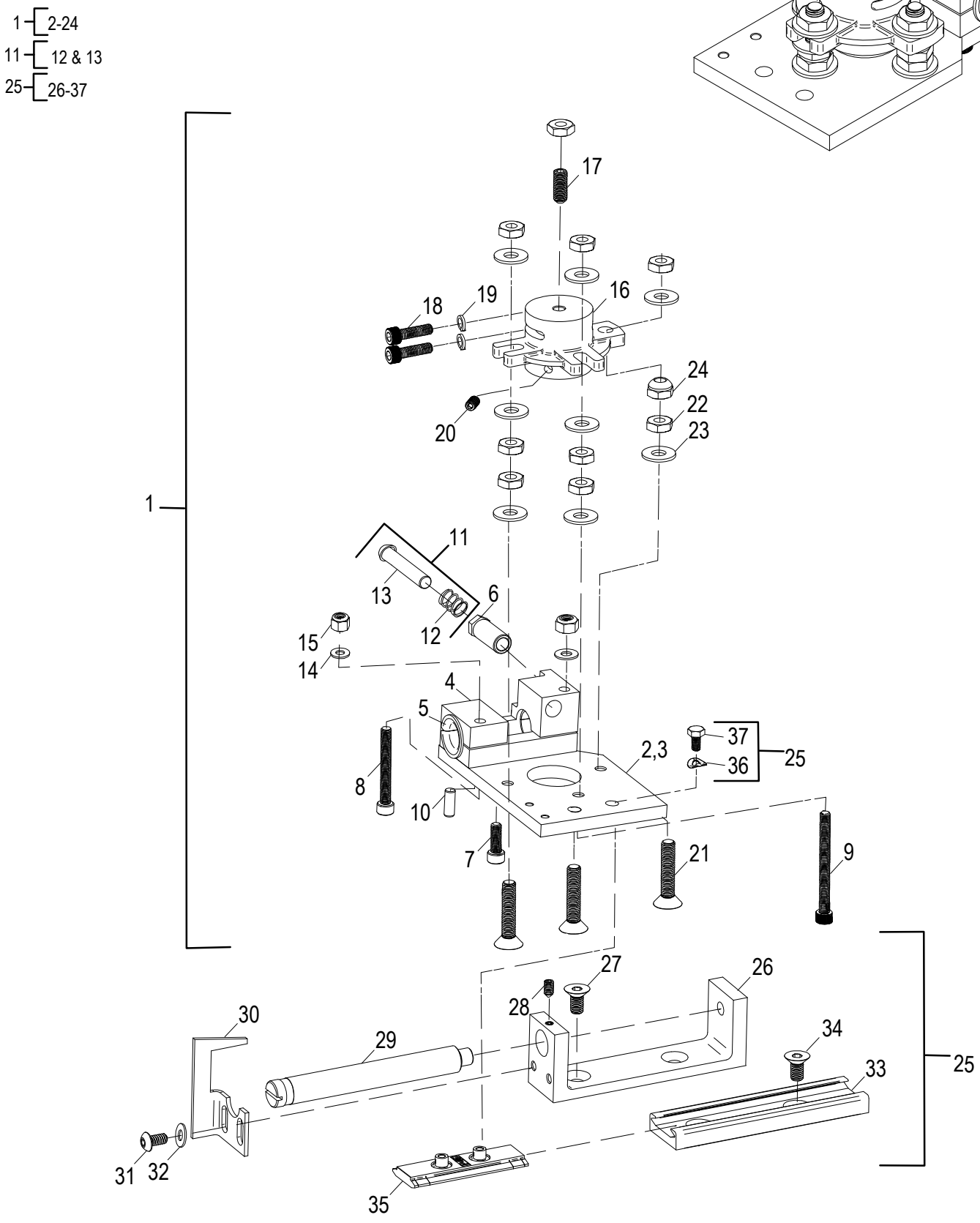

© Globe Food Equipment Company

S213 Index Plate Assembly Components

Item	Part Number	Description	Qty	Serial Number
1	460350	Index Plate Assembly (Incls. items 2-24)	1	
2	460338	Index Carriage Block Assembly (Incls. items 3-10)	1	
3	460333	Index Carriage Plate	1	
4	460306	Index Slide and Follower Mount	1	
5	800365	Glide Shoulder Bushing 0.50 x 0.75	2	
6	450152	Follower Adjustment Post	1	
7	800132	Hex Socket Cap Head Screw #10-32 x0.562	1	
8	800371	Hex Socket Cap Screw 10-32x1.50	1	
9	800372	Hex Socket Cap Screw 10-32 x 2.0	1	
10	800501	Dowel Pin 3/16 Dia. x 0.50	2	
11	400275	Follower Kit (Incls. items 12-13)	1	
12	800438	Compression Spring 0.360x 0.045 Wire Dia x 0.375	1	
13	460258	Follower	1	
14	810278	Flat Washer, No.10x0.44	2	
15	800231	Nylon Insert Lock Nut #10-32	2	
16	460259	Post Adjust	1	
17	810403	Hex Socket Cup Point Set Screw 1/4-28x0.625	1	
18	810522	Hex Socket Cap Head Screw 10-32x0.687	2	
19	800370	Split Lock Washer #10x0.294	2	
20	800432	Hex Socket Cone Point Set Screw 10-32x0.375	1	
21	800369	Hex Socket Flat Head Screw 1/4-28x1.25	3	
22	810489	Jam Nut 1/4-28	9	
23	810410	Flat Washer 0.266x0.625	8	
24	810510	Hex Pivot Nut 1/4-28	1	
25	400276	Index Carriage Rail Kit (Incls. items 26-37)	1	
26	460304	Index Carriage Rail Base	1	
27	800380	Slotted Flat Head Screw 8-32 x 0.375	2	
28	800091	Hex Socket Knurl-Cup Point Set Screw 8-32 X 0.1875"	1	
29	460305	Index Carriage Rail Shaft	1	
30	300218	Index Stop	1	
31	800077	Hex Socket Button Head Screw #10-24 x 0.375	2	
32	810279	Spring Washer #10 x 0.42	2	
33	460300	Index Glide Rail	1	
34	800381	Hex Socket Flat Head Screw M6 x 1 x 12 mm	2	
35	500104	Glide Rail Bearing	1	
36	800382	Single Wave Washer 4.3 mm x 9 mm	2	
37	800383	Hex Head Screw M4 x 0.7 mm x 8 mm	2	

© Globe Food Equipment Company

S213 Transport Assembly Components

2 — 3-4
6 — 7-10
13 — 14-21
16 — 17-20
22 — 23-26
27 — 28 & 29

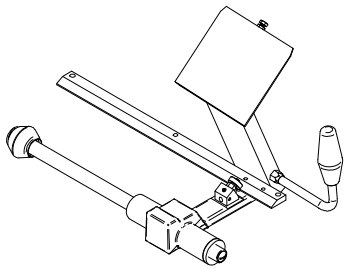

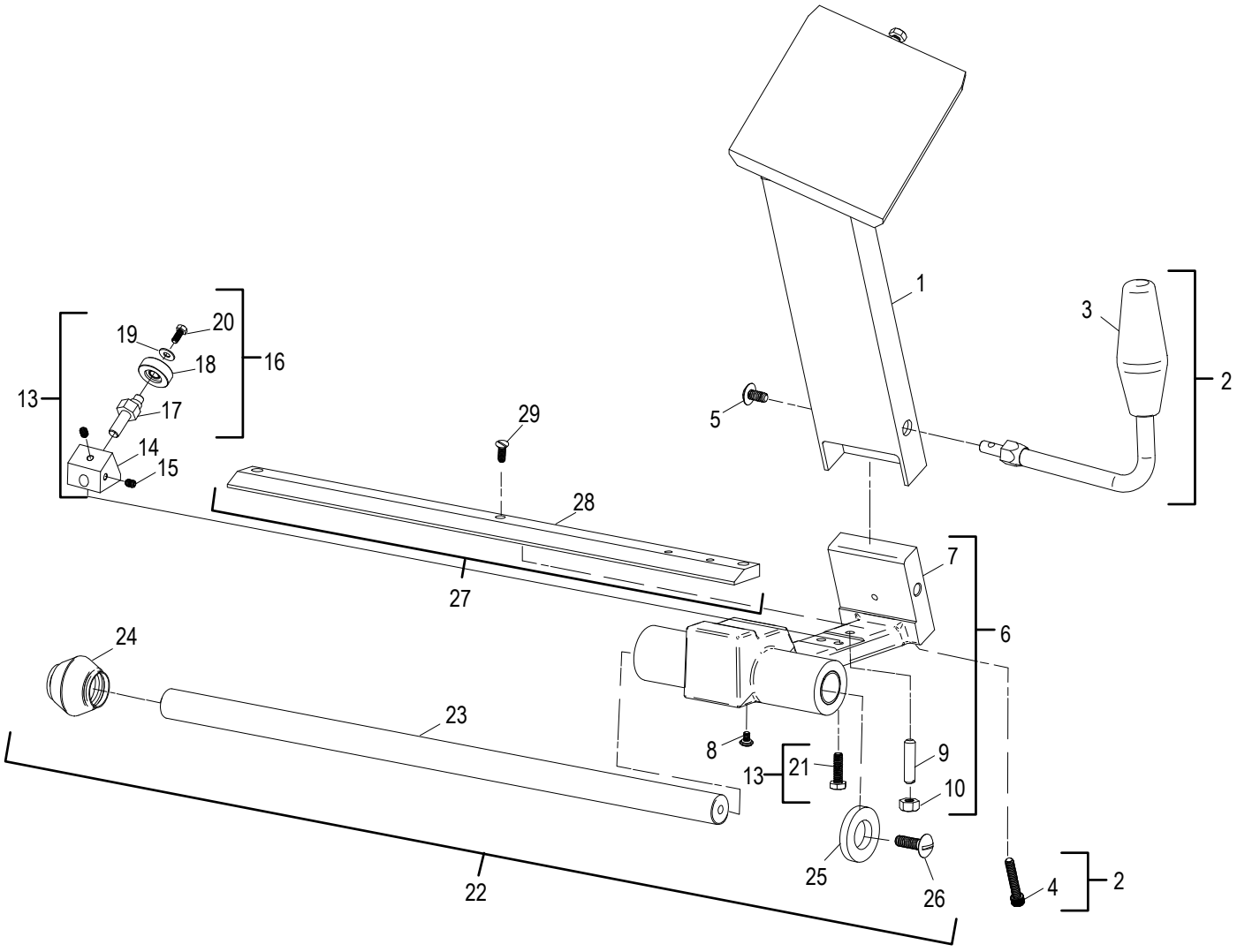

© Globe Food Equipment Company

S213 Transport Assembly Components

Item	Part Number	Description	Qty	Serial Number
1	400227	Carriage Arm & Mount Assembly	1	
2	400279	Carriage Operator Handle Arm with Lock Nut (Incls. Items 3-4)	1	
3	400208	Carriage Operator Handle Assembly	1	
4	800378	Hex Socket Cap Head Screw 1/4-20x1.375	1	
5	800423	Slotted Wide Truss Head Screw 1/4-20x0.50	2	
6	460268	Manual Transport Assembly (Incls. items 7-11)	1	
7	460267	Machined Manual Transport	1	
8	810232	Phillips Pan Head Sealing Screw 8-32 x 0.25"	1	
9	800015	Transport Tie Down Screw 5/16-24x1.30"	1	
10	800048	Hex Nut 5/16-24	1	
11	810501	Glide Bushing - 7/8" x 1.00" Not Shown	2	
12	810500	Felt Oil Ring Not Shown	1	
13	400282	Eccentric Kit (Incls. Items 14-21)	1	
14	400219	Eccentric Roller Block	1	
15	800094	Hex Socket Knurl-Cup Point Set Screw 10-32 x 0.25	2	
16	400281	Eccentric Roller Shaft Kit (Incls. Items 16-19)	0	
17	400218	Eccentric Roller Shaft	1	
18	520234	Roller Bearing Assembly, Press Fit	1	
19	870072	Flat Washer, #8 x 0.44	1	
20	800099	Hex Head Screw #8-32x0.375	1	
21	800329	Hex Head Screw 1/4-20 x 0.875	2	
22	400283	Transport Shaft Kit (Incls. Items 23-26)	1	
23	460207	Transport Shaft	1	
24	800427	Sleeved Spring Assembly	1	
25	500119	Transport Bumper	1	
26	800071	Slotted Truss Head Screw 5/16-18x1.0	2	
27	400285	Transport Roller Bar Kit (Incls. Items 28-29)	1	
28	460206	Transport Roller Bar	1	
29	800411	Slotted Flat Head Screw 1/4-20x0.75	1	

© Globe Food Equipment Company

S213 Carriage Tray Assembly Components

1 — 2-36
3 — 5-11 & 13-17
4 — 5-11
12 — 13-17
18 — 19-22
24 — 25-32
25 — 26-27
29 — 30-31
33 — 34-36

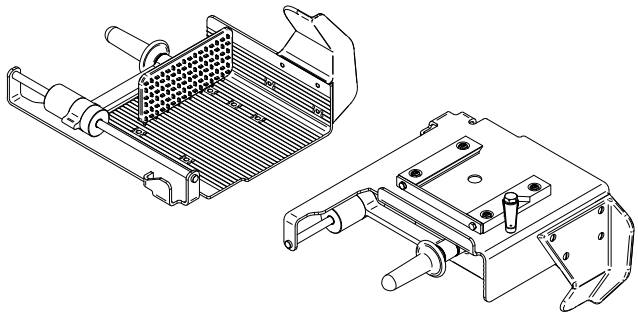

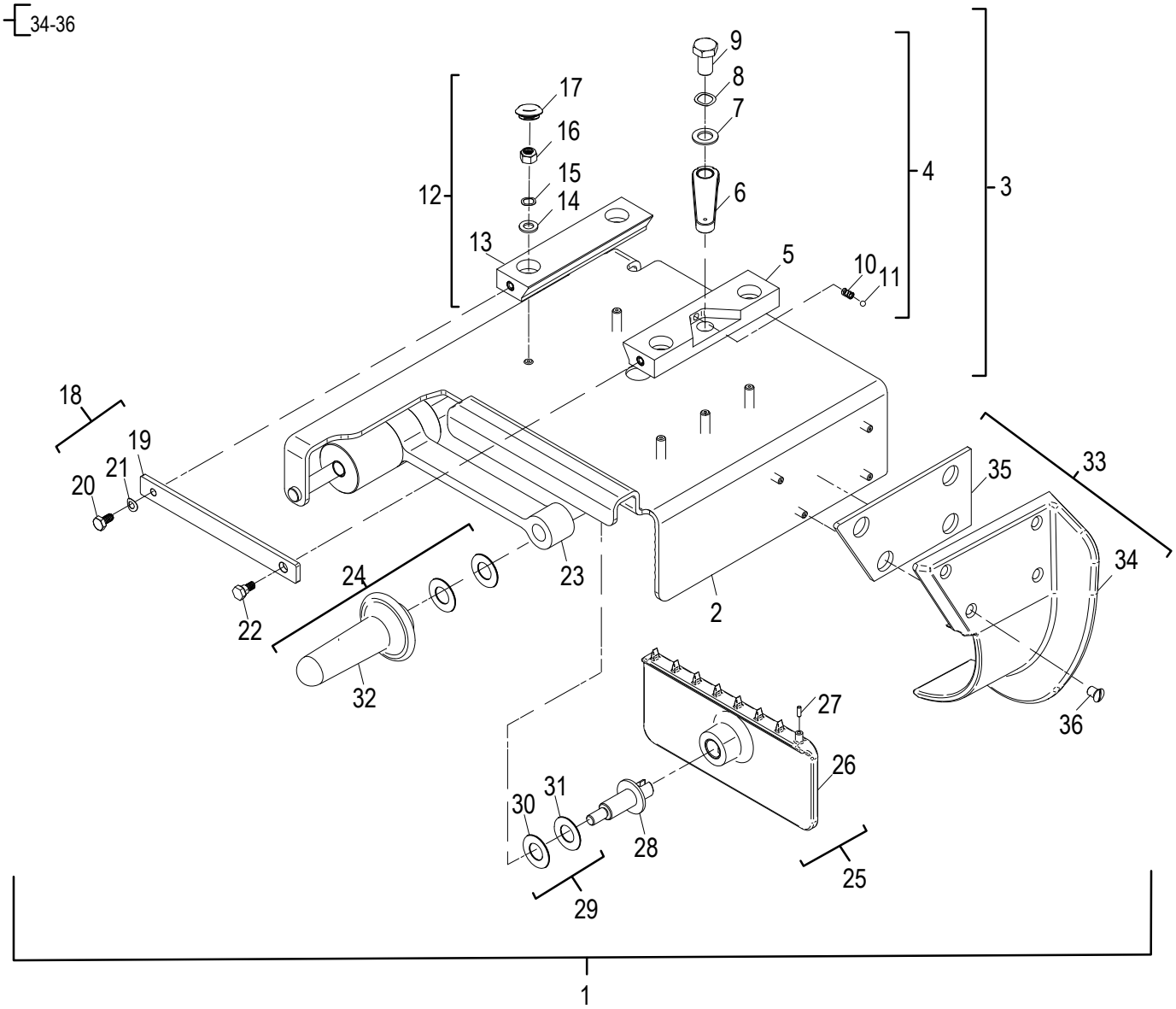

© Globe Food Equipment Company

S213 Carriage Tray Assembly Components

Item	Part Number	Description		Qty	Serial Number
1	300168	Carriage Tray Assembly	(Incls. items 2-36)	1	
2	300248	Carriage Tray Stud Inserts		1	
3	500145	Carriage Mount Receiver Kit	(Incls. items 5-11 & 13-17)	1	
4	500146-01	Carriage Mount Clamping Receiver Kit	(Incls. items 5-11)	1	
5	510112	Carriage Mount Clamping Receiver Assembly		1	
6	400053	Carriage Lever Lock Assembly		1	
7	800359	Flat Washer 1/2 x 0.885		1	
8	800358	Wave Spring Washer 1/2 x 0.734		1	
9	460262	Lever Stud		1	
10	800361	Compression Spring 0.24x0.029x0.375		1	
11	800362	Ball 7/32		1	
12	500150	Carriage Mount Stationary Receiver Kit	(Incls. items 13-17)	1	
13	510113	Carriage Mount Stationary Receiver Assembly		1	
14	810272	Flat Washer 5/16 x 0.63		4	
15	800354	Wave Spring Washer 0.35x0.492		4	
16	810420	Nylon Insert Locknut 5/16-18		4	
17	800360	Plastic Snap In Panel Plugs 13/16 ID x 0.37		4	
18	400295-01	Carriage Stop Bar Kit	(Incls. items 19-22)	1	
19	460263	Carriage Stop Bar		1	
20	800356	Hex Head Screw 1/4-20 x 0.50		1	
21	870092	Spring Washer 0.256 x 0.490		1	
22	800367	Hex Head Shoulder Screw 5/16x0.25_1/4-20x0.375		1	
23	400099	End Weight Arm Assembly		1	
24	500148	Removable End Weight Kit	(Incls. items 25-32)	1	
25	500151	Quarter Turn Removable End Weight Face Kit	(Incls. items 26-27)	1	
26	500066	Quarter Turn Removable End Weight Face		1	
27	800047	Delrin Pin, 1/8 Dia x 3/8		1	
28	400178	Removable End Weight Face CamLock Shaft		1	
29	800164	End Weight Face Washer Kit	(Incls. items 30-31)	1	
30	800033-01	End Weight Face Washer		2	
31	800033-02	End Weight Face Washer		2	
32	500024	End Weight Handle		1	
33	500147-01	Carriage Thumb Guard Kit	(Incls. items 34-36)	1	
34	500149	Carriage Thumb Guard		1	
35	510038	Carriage Thumb Guard Gasket		1	
36	800363	Thumb Guard Cap Screw, 1/4-20x0.50		4	

© Globe Food Equipment Company

S213 Electrical Components

2 — 3 & 4
10 — 11 & 12
14 — 15-19
20 — 21-22
24 — 25-27

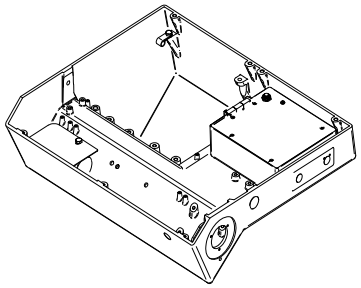

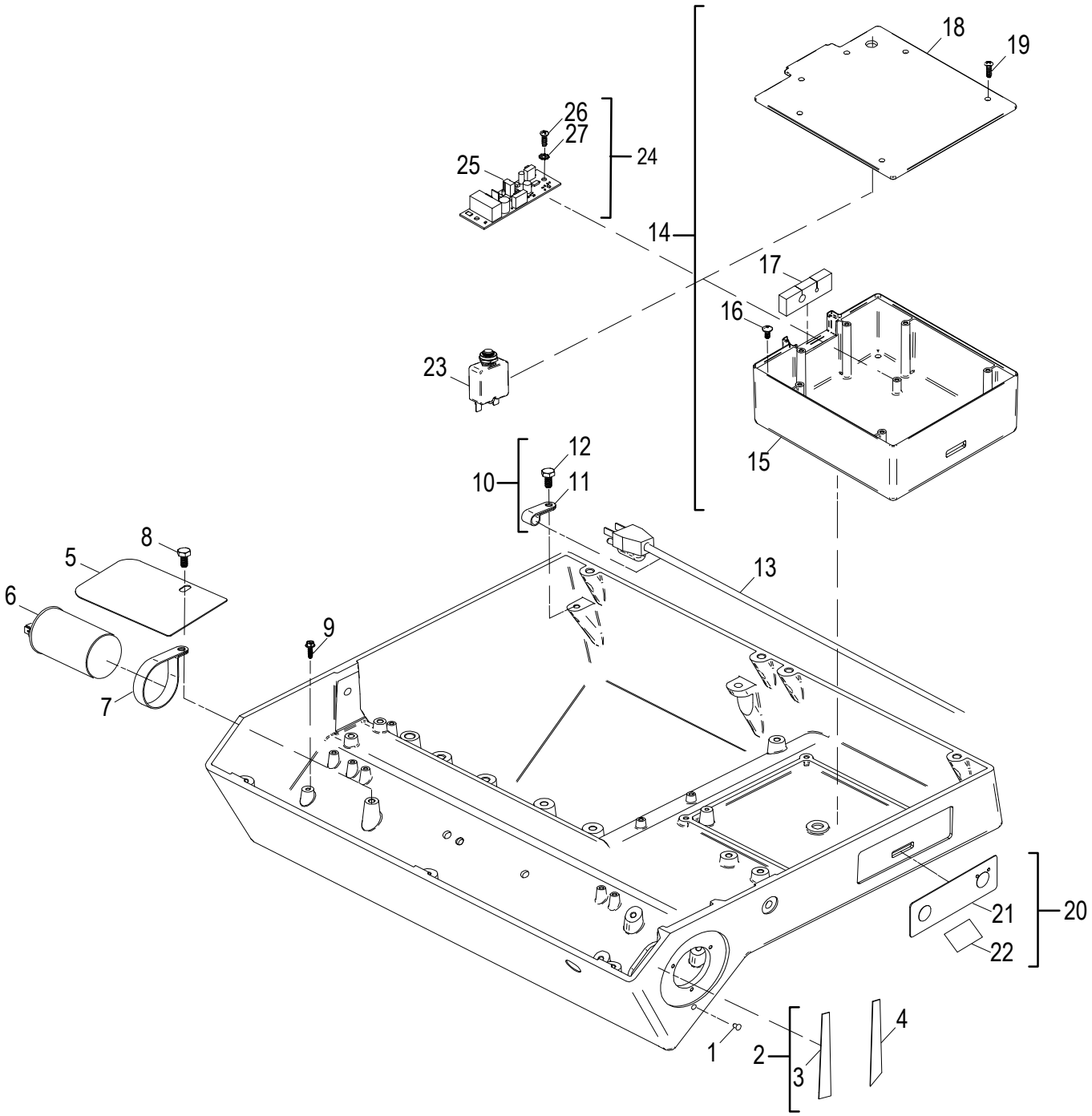

© Globe Food Equipment Company

S213 Electrical Components

Item	Part Number	Description	Qty	Serial Number
1	810434	Type U Drive Screw, #4 x 1/4	1	
2	500142	PSA Kit (Incls. items 3-4)	1	
3	500108	PSA Trapezoidal Flat Bearing	1	
4	500107	PSA Quadrilateral Flat Bearing	1	
5	300244	Capacitor Cover	1	
6	140015	Capacitor, Knife Motor 120V	1	
7	110228	Capacitor Clamp (120V)	1	
8	800356	Hex Head Screw 1/4-20 x 0.50	1	
9	800202	Green Slotted Hex Washer Head Screw #8-32 x 0.312	1	
10	100059	Power Cord Strain Relief Kit (Incls. Items 11-12)	1	
11	110227	Power Cord Strain Relief	2	
12	800356	Hex Head Screw 1/4-20 x 0.50	2	
13	100027	Power Supply Cord 120 VAC 15A	1	
14	500161-01	Manual Electrical Box Kit (Incls. Items 15-19)	1	
15	500130	Electronic Box	1	
16	800524	Phillips Pan Head Screw10-24 x 5/16	4	
17	500117	Manual Wireway Entry	1	
18	510121	Electronics Box Cover	1	
19	800392	Phillips Round Head Thread Forming Screw 8-16x0.5(	6	
20	100075	S2 Membrane Switch Kit	1	
21	900066	Membrane Switch, Manual Slicer	1	
22	910088	Pad, Alcohol Prep	1	
23	140017-01	Circuit Breaker	1	
24	100067	Manual Control Board Kit (Incls. Items 23-25)	1	
25	100012	Manual Control Board	1	
26	800392	Phillips Round Head Thread Forming Screw 8-16x0.5(	4	
27	800115	External Tooth Lock Washer #8x0.381	4	
28	100045	Cable Tie Mountable (Not Shown)	5	
29	910043	5.5" Cable Tie (Not Shown)	1	

© Globe Food Equipment Company

S213 Slicer Schematic

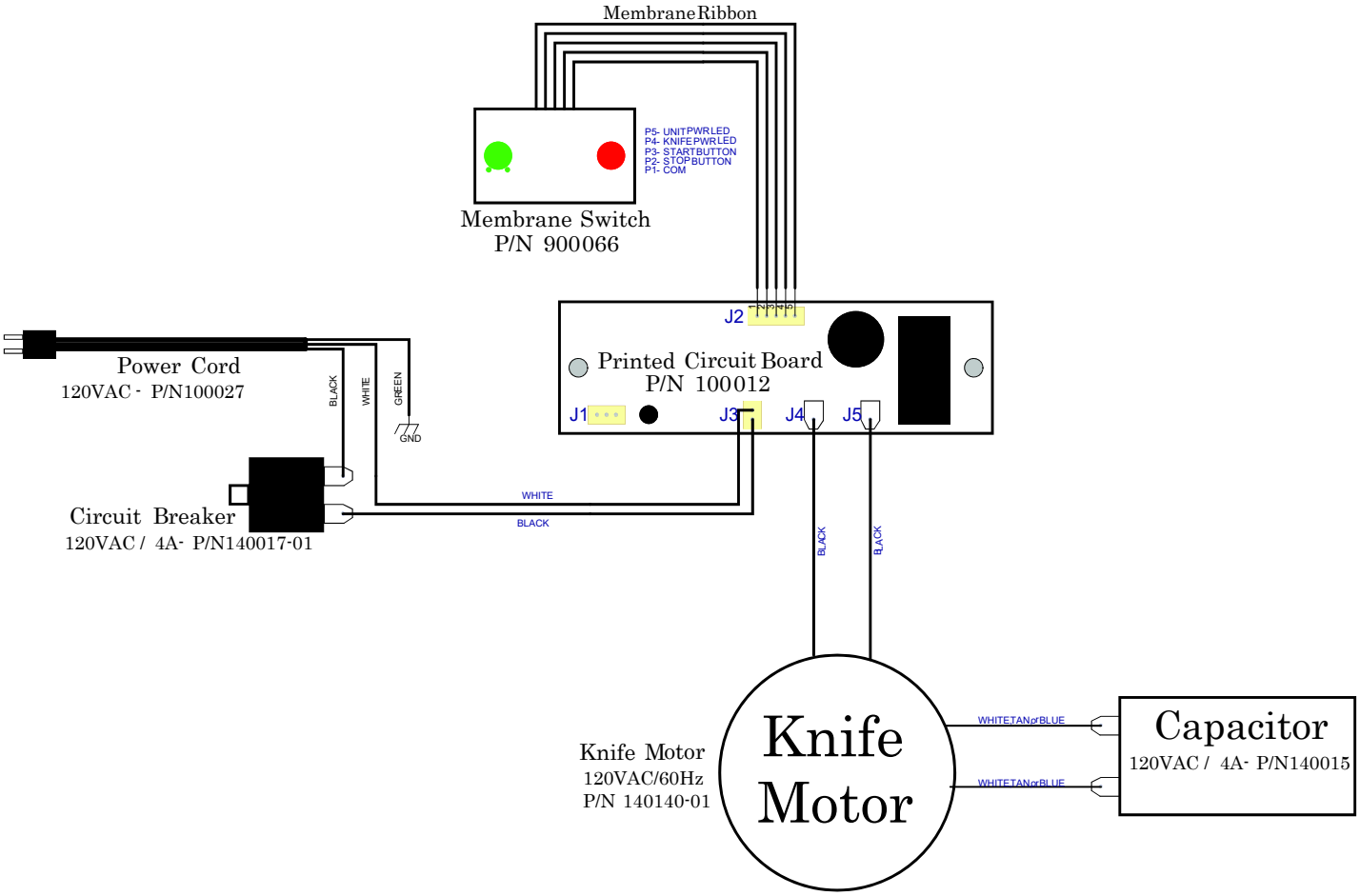

© Globe Food Equipment Company